UNDERGRADUATE INDUCTION DAY
Friday 9th October 2026

Welcome to the Department of Engineering Science. We're looking forward to meeting you, and we hope that you are looking forward to commencing study with us. Undergraduate Induction will take place in the Engineering Science Department Thom Building on **Friday 9th October 2026.** You should aim to arrive and be seated in LR1 (1st floor of the Thom Building) by 1.55 pm as the induction programme will start promptly at **2.00 pm.**

Welcome and Introductions

2.00pm Welcome to the Department of Engineering Science
Professor Clive Siviour, Head of Department

2.10pm Introduction to Safety in the Department of Engineering Science
Department Safety Office

2.20pm Introduction to Departmental Buildings: Access, Security and Environment
Nick Rhodes, Facilities Manager and Olivia Gibbs, Assistant Facilities Manager

2.35pm Breakout Rooms – Across the Department (25min each)

Introduction to the Undergraduate Course
Professor Steve Morris, Associate Head of Department (Teaching)

Introduction to Laboratories
Dr. Nikita Hari, Head of Teaching and Design Group (TDSG)

Meet the Student Administration Office and Student Societies
Dr. Phil Bolton, Head of Student Administration and Student Administration Team

IT and Canvas Induction
Dr. Isaac Mear, Teaching and Design Engineer

4:15pm Speed Networking
Meet Engineering students from other colleges

4:30pm End of Department Induction

In this induction pack, you also have some things to do before the start of term:

- **Pre-course revision sheets**. It's important that you complete these before the course commences.
- We may occasionally take photographs of you in labs or lectures, or individually for promotional purposes. Please complete this form:

  Under 18s: https://app.onlinesurveys.jisc.ac.uk/s/oxford/student-photo-consent-form-2026-under-18s
  Over 18s: https://app.onlinesurveys.jisc.ac.uk/s/oxford/student-photo-consent-form-2026-over-18s

If you have any questions about being a student in the Department of Engineering Science, please get in touch with us at student.administration@eng.ox.ac.uk

Use of Calculators in Engineering Examinations

As specified in the University's **Examination Regulations**, in your examinations you will be permitted to take into the examination room only these calculators listed below:

- **CASIO fx-83 series (e.g. Casio FX83GT)**
- **CASIO fx-85 series (e.g. Casio FX85GT)**
- **SHARP EL-531 series (e.g. Sharp EL-531WB)**

You are advised to buy a calculator of the type listed above in good time, and to familiarize yourself with its operation before your Preliminary examinations.

Please note that the restriction will apply to **examinations** only. For all your laboratory, project and tutorial work, you are free to use any calculator you wish.

Engineering Science
Mathematics Revision

July 2026

Prof Martin Booth

Preamble

Throughout your time as an engineering student at Oxford you will receive lectures and tuition in the range of applied mathematical tools that today's professional engineer needs at her or his fingertips. The "1P1 series" of lectures starts in the first term with courses in Calculus, Linear and Complex Algebra, and Differential Equations. Many of the topics will be familiar, others less so, but inevitably the pace of teaching and its style involving lectures and tutorials, will be wholly new to you.

To ease your transition, this introductory sheet provides a number of revision exercises related to these courses. Some questions may require you to read around. Although a few texts are mentioned on the next page, the material will be found in Further Maths A-level (or equivalent level) textbooks, so do not rush immediately to buy.

This sheet has not been designed to be completed in an evening, nor are all the questions easy. Including revision, and proper laying out of your solutions, the sheet probably represents up to a week's work. We suggest that you start the sheet at least three weeks before you come up so that your revision has time to sink in. The questions and answers should be still fresh in your mind by 1st week of term, when your college tutors are likely to review your work.

What does "proper" laying out of your solutions mean? It means not merely writing down an answer (they are in the back after all!), but showing and briefly explaining the logical progression of ideas. Often, sketching and labelling a diagram should be part of your solution, even if not explicitly requested.

> ☞ Do remember to bring your solutions to Oxford with you. It is probably best to keep the different sets of solutions (maths, electricity, etc.) physically separate, as they are likely to have to be sent to different tutors once here.

Reading

The ability to learn new material yourself is an important skill which you must acquire. But, like all books, mathematics for engineering texts are personal things. Some like the bald equations, others like to be given plenty of physical insight.

However, two useful texts for our course are:

Title:	Advanced Engineering Mathematics
Author:	K. Stroud (with D. J. Booth)
Publisher:	Red Globe Press
Edition:	8th ed. (2020)
ISBN:	978-1352010275 (Paperback c.£50 new)

Title:	Advanced Engineering Mathematics
Author:	E. Kreyszig
Publisher:	John Wiley & Sons
Edition:	11th ed. (2025)
ISBN:	978-1394319466 (Paperback c.£60 new)

Stroud's text covers material for the 1st year and some things beyond, and is well reviewed by students. Kreyszig's book is more comprehensive and will be useful throughout your course and later career.

However, as mentioned earlier, don't rush to buy these for this sheet, which is mostly revision of A-level (or equivalent course) material. There are many other text books you may personally prefer. Also, you do not need to have the latest edition, as the content will not have changed much over recent editions.

1. Differentiation

☞ You should be able to differentiate simple functions:

1. $5x^2$

2. $4\tan x$

3. $4e^x$

4. $\sqrt{1+x}$

☞ use the chain rule to differentiate more complicated functions:

5. $6\cos(x^2)$

6. e^{3x^4}

☞ know the rules for differentiation of products and quotients:

7. $x^2 \sin x$

8. $\dfrac{\tan x}{x}$

☞ understand the physical meaning of the process of differentiation:

9. The velocity of a particle is given by $20t^2 - 400e^{-t}$, where t is time. Determine its acceleration at time $t = 2$.

10. Find the stationary points of the function $y = x^2 e^{-x}$, and determine whether each such point is a maximum or minimum.

2. Integration

☞ You should understand the difference between a definite and an indefinite integral, and be able to integrate simple functions by recognising them as derivatives of familiar functions:

11. $\int_a^b 3x^2 \mathrm{d}x$

12. $\int (x^4 + x^3)\mathrm{d}x$

13. $\int \sin x \cos^5 x \mathrm{d}x$

14. $\displaystyle\int \frac{x}{\sqrt{1-x^2}}\mathrm{d}x$

☞ be able to manipulate functions so that more complex functions become recognisable for integration:

15. $\int_0^{2\pi} \sin^2 x \, \mathrm{d}x$

16. $\int \tan x \, \mathrm{d}x$

☞ change variables, e.g. using $x = \sin\theta$ or some other trigonometric expression, to integrate functions such as:

17. $\displaystyle\int \frac{1}{\sqrt{1-x^2}} \, \mathrm{d}x$

18. $\displaystyle\int \frac{1}{\sqrt{a^2-x^2}} \, \mathrm{d}x$

☞ use integration by parts for certain more complicated functions:

19. $\int x \sin x \, \mathrm{d}x$

☞ understand the physical meaning of integration:

20. What is the area between the curve $y = 8x - x^4$ and the x-axis for the section of the curve starting at the origin which lies above the x-axis?

21. The velocity of a particle is $20t^2 - 400\mathrm{e}^{-t}$, and the particle is at the origin at time $t = 0$. Determine how far it is from the origin at time $t = 2$.

3. Series

☞ You should be able to sum arithmetic and geometric series:

22. Sum (using a formula, not by explicit addition!) the first ten numbers in the series

$$10.0, \quad 11.1, \quad 12.2, \quad \ldots$$

23. Sum the first ten terms of the series

$$x, \quad 2x^2, \quad 4x^3, \quad \ldots$$

☞ understand what a binomial series is:

24. Find the first four terms in the expansion of $(a + 2x)^n$, where n is an integer and $n > 3$.

4. Functions

☞ You should be familiar with the properties of standard functions, such polynomials, rational functions (where both numerator and denominator are polynomials), exponential functions, logarithmic functions, and trigonometric functions and their identities:

25. i) For what value(s) of x is the function $f(x) = x/(x^2 - 1)$ undefined? Describe the behaviour of f as x approaches these values from above and below.

ii) Find the limits of $f(x)$ and df/dx as $x \to +\infty$ and $x \to -\infty$.

iii) Does the function have stationary values? If so, find the values of x and $f(x)$ at them.

iv) Now make a sketch of the function, labelling all salient features.

26. Sketch $y = e^{-t}$ and $y = e^{-3t}$ versus time t for $0 \leq t \leq 3$. When a quantity varies as $e^{-t/\tau}$, τ is called the *time constant*. What are the time constants of your two plots? Add to your sketch two curves showing the variation of a quantity with (i) a very short time constant, (ii) a very long time constant.

27. A quantity varies as $y = 100e^{-10t} + e^{-t/10}$. Which part controls the behaviour of y at short time scales (ie when t is just above zero), and which at long times-scales?

28. A quantity y_1 varies with time t as $y_1 = 2\cos\omega t$. A second quantity y_2 varies as $y_2 = \cos(2\omega t + \frac{\pi}{4})$. Plot y_1 and y_2 versus ωt, for $-2\pi < \omega t < 2\pi$. What are the amplitudes and frequencies of y_1 and y_2?

☞ The hyperbolic cosine is defined as $\cosh x = \frac{1}{2}(e^x + e^{-x})$, and the hyperbolic sine is defined as $\sinh x = \frac{1}{2}(e^x - e^{-x})$. Other hyperbolic functions are defined by analogy with trigonometric functions: eg, the hyperbolic tangent is $\tanh x = \sinh x / \cosh x$.

29. Show that
(i) $\cosh^2 x - \sinh^2 x = 1$; (ii) $(1 - \tanh^2 x)\sinh 2x = 2\tanh x$.

30. Find $\frac{\mathrm{d}}{\mathrm{d}x}\cosh x$ and $\frac{\mathrm{d}}{\mathrm{d}x}\sinh x$. Express your results as hyperbolic functions.

5. Complex Algebra

☞ You should find this topic in most A-level texts. We will use the notation that a complex number $z = (x + iy)$, where x and y are the **Real** and **Imaginary** parts of z, respectively. That is, $x = \text{Re}(z)$ and $y = \text{Im}(z)$. The **Imaginary unit** i is such that $i^2 = -1$. Complex numbers can be represented as points on an Argand diagram. The modulus or magnitude of the complex number is r, where $r^2 = x^2 + y^2$, and the argument is θ. Obviously $x = r\cos\theta$, and $y = r\sin\theta$.

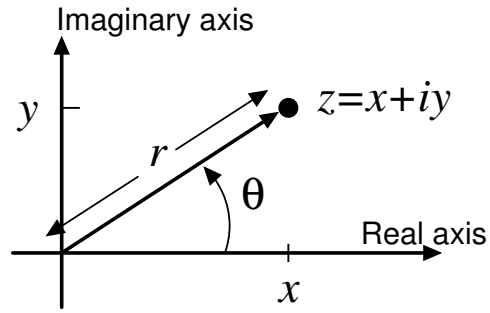

31. Evaluate (i) $(1 + 2i) + (2 + 3i)$; (ii) $(1 + 2i)(2 + 3i)$; (iii) $(1 + 2i)^3$ and plot the resulting complex numbers on an Argand diagram. Determine the arguments of $(1 + 2i)$ and $(1 + 2i)^3$.

32. If $z = (x + iy)$, its **complex conjugate** is defined as $\overline{z} = (x - iy)$. Show that $z\overline{z} = (x^2 + y^2)$.

33. By multiplying top and bottom of the complex fraction by the complex conjugate of $(3 + 4i)$, evaluate $\dfrac{1 + 2i}{3 + 4i}$.

34. Using the usual quadratic formula, find the two complex roots of $z^2 + 2z + 2 = 0$. (Hint: as $i^2 = -1$ we have that $\sqrt{-1} = \pm i$.) Are complex solutions to a quadratic equation always conjugates?

35. Using standard trigonometrical identities, show that

$$(\cos\theta + i\sin\theta)^2 = (\cos 2\theta + i\sin 2\theta).$$

(More generally, $(\cos\theta + i\sin\theta)^\alpha = (\cos\alpha\theta + i\sin\alpha\theta)$ for *any* α.)

6. Vectors

Below, vectors are written in bold, unit vectors in the (x, y, z) directions are $(\mathbf{i}, \mathbf{j}, \mathbf{k})$, and a vector from point A to point B may be written $\overrightarrow{AB}$.

☞ You should be familiar with the vector algebra of points, lines and planes, and with the scalar product.

36. Find the **unit** vector $\hat{\mathbf{v}}$ in the direction $\mathbf{i} - \mathbf{j} + 2\mathbf{k}$.

37. Find the coordinates of point P if $|\overrightarrow{OP}| = 3$ and vector $\overrightarrow{OP}$ is in the direction of (i) $\mathbf{i}+\mathbf{j}+\mathbf{k}$, (ii) $\mathbf{i}-2\mathbf{j}+3\mathbf{k}$. ($O$ is the origin.)

38. Write down the vector equation of the straight lines (i) parallel to $\mathbf{i}+\mathbf{j}+\mathbf{k}$ and through the origin, (ii) parallel to $\mathbf{i}-2\mathbf{j}+\mathbf{k}$ and through the point (1,1,1).

39. Find the point on the line $\mathbf{i}+\mathbf{j}+\mathbf{k}$ that is nearest to the point $(3, 4, 5)$.

40. Determine the angle between the vectors $(\mathbf{i}+2\mathbf{j}+3\mathbf{k})$ and $(3\mathbf{i}+2\mathbf{j}+\mathbf{k})$.

41. Find the vector position of a point 1/3 of the way along the line between (x_1, y_1, z_1) and (x_2, y_2, z_2), and nearer (x_1, y_1, z_1).

42. At time $t = 0$ two forces $\mathbf{f}_1 = (\mathbf{i}+\mathbf{j})$ and $\mathbf{f}_2 = (2\mathbf{i}-2\mathbf{j})$ start to act on a point body of unit mass which lies stationary at point $(1, 2)$ of the x, y plane. Determine the subsequent trajectory $\mathbf{r}(t)$ of the particle. At $t = 2$ the $\mathbf{i}$ components of both forces vanish. What is the trajectory for $t > 2$?

Bare answers and hints

1. $10x$

2. $4\sec^2 x$

3. $4\mathrm{e}^x$

4. $1/(2\sqrt{1+x})$

5. $-12x\sin(x^2)$

6. $12x^3\mathrm{e}^{3x^4}$

7. $x^2\cos x + 2x\sin x$

8. $(x\sec^2 x - \tan x)/x^2$

9. $80 + 400/\mathrm{e}^2 \approx 134.1$

10. Min at $(0, 0)$, Max at $(2, 4\mathrm{e}^{-2})$

11. $b^3 - a^3$

12. $x^5/5 + x^4/4 + C$

13. $-\frac{1}{6}\cos^6 x + C$

14. $-\sqrt{1-x^2} + C$

15. π

16. $-\ln(\cos x) + C$, where ln denotes $\log_\mathrm{e}$

17. $\sin^{-1} x + C$

18. $\sin^{-1}(x/a) + C$

19. $-x\cos x + \sin x + C$

20. 9.6

21. $(160/3) + (400/e^2) - 400 \approx -292.5$

22. 149.5

23. $\dfrac{x(1-1024x^{10})}{1-2x}$

24. $a^n + 2na^{n-1}x + 2n(n-1)a^{n-2}x^2 + \frac{4}{3}n(n-1)(n-2)a^{n-3}x^3 + \ldots$

25. (i) $f(x) = x/(x^2-1)$ undefined at $x = \pm 1$. Asymptotic behaviour at $x = \pm 1$. (ii) As $x \to +\infty$, $f(x) \to 0$ from above. As $x \to -\infty$, $f(x) \to 0$ from below. Gradients both tend to zero. (iii) $\mathrm{d}f/\mathrm{d}x = -(x^2+1)/(x^2-1)^2$ is nowhere zero, hence no turning points.

26. $y = e^{-t}$ and $y = e^{-3t}$: time constants 1 and 1/3 respectively.

27. $100e^{-10t}$ dominates at small t. Note cross over when $100e^{-10t} = e^{-t/10}$ or $e^{-9.9t} = 0.01$, ie at $t = 0.46$.

28. Amplitude 2, frequency $f = \omega/2\pi$; Amplitude 1, frequency $f = \omega/\pi$.

† Please see the suggestion at the bottom of the page.

29. (i) $\cosh^2 x = (e^{2x} + e^{-2x} + 2)/4$; $\sinh^2 x = (e^{2x} + e^{-2x} - 2)/4$; $\cosh^2 - \sinh^2 = 4/4 = 1$.

(ii) $1 - \tanh^2 = 1/\cosh^2$; $\sinh 2x = 2\cosh x \sinh x$; Hence $(1 - \tanh^2 x)\sinh 2x = 2\cosh x \sinh x/\cosh^2 x = 2\tanh x$.

30. $\frac{d}{dx}(e^x + e^{-x})/2 = (e^x - e^{-x})/2$. Hence $\frac{d}{dx}\cosh x = \sinh x$ and similarly $\frac{d}{dx}\sinh x = \cosh x$.

31. (i) $(3 + 5i)$; (ii) $(-4 + 7i)$; (iii) $(-11 - 2i)$;

32. Note $\sqrt{x^2 + y^2}$ is the *modulus* of z (and of $\overline{z}$ too for that matter).

33. (11/25) + i(2/25)

34. Solutions are $(-1 \pm i)$. Yes: for a complex soln. The usual formula gives roots as

$$(-b \pm \sqrt{b^2 - 4ac})/2a.$$

For complex roots, $b^2 - 4ac < 0$, giving the imaginary part and $\pm$ signs always gives conjugate pairs with the same real part. Note though if $b^2 - 4ac > 0$ the two real solutions are different.

35. (i) Square to find $(cos^2\theta - \sin^2\theta + 2i\sin\theta\cos\theta)$, hence result.

36. $\hat{\mathbf{v}} = \frac{1}{\sqrt{6}}(\mathbf{i} - \mathbf{j} + 2\mathbf{k})$.

37. (i) $(\sqrt{3}, \sqrt{3}, \sqrt{3})$, (ii) $\frac{3}{\sqrt{14}}(1, -2, 3)$.

38. (i) $\mathbf{r} = \dfrac{\alpha}{\sqrt{3}}(\mathbf{i} + \mathbf{j} + \mathbf{k})$, where parameter α is any real number. (NB: strictly no need for the $\sqrt{3}$, but using it makes α a measure of distance).

(ii)

$$\mathbf{r} = \left(1 + \frac{\alpha}{\sqrt{6}}\right)\mathbf{i} + \left(1 - \frac{2\alpha}{\sqrt{6}}\right)\mathbf{j} + \left(1 + \frac{\alpha}{\sqrt{6}}\right)\mathbf{k}$$

(Again no real need for $\sqrt{6}$, but ...)

39. Vector from point to a general point on line is $(\frac{\alpha}{\sqrt{3}} - 3)\mathbf{i} + (\frac{\alpha}{\sqrt{3}} - 4)\mathbf{j} + (\frac{\alpha}{\sqrt{3}} - 5)\mathbf{k}$. We want α corresponding to minimum distance, or minimum squared-distance. Squared distance is $d^2 = (\frac{\alpha}{\sqrt{3}} - 3)^2 + (\frac{\alpha}{\sqrt{3}} - 4)^2 + (\frac{\alpha}{\sqrt{3}} - 5)^2$.. Diff wrt α and set to zero, cancelling factor of $2/\sqrt{3}$, gives $(\frac{\alpha}{\sqrt{3}} - 3) + (\frac{\alpha}{\sqrt{3}} - 4) + \frac{\alpha}{\sqrt{3}} - 5) = 0$, so that $\alpha = 4\sqrt{3}$. Thus the closest point is $(4, 4, 4)$.

40. Take the scalar product of **UNIT** vectors! $\cos^{-1}(10/14) = 44.41°$.

41. $(x_1, y_1, z_1) + \frac{1}{3}[(x_2, y_2, z_2) - (x_1, y_1, z_1)] = \frac{1}{3}[(2x_1 + x_2), (2y_1 + y_2), (2z_1 + z_2)]$.

42. Total force is $(3\mathbf{i} - \mathbf{j})$ so for unit mass, $\ddot{x} = 3; \ddot{y} = -1$. Thus $\dot{x} = 3t + a$; $\dot{y} = -t + b$ where $a = b = 0$, as stationary at $t = 0$. Hence $x = 3t^2/2 + c$ and $y = -t^2/2 + d$, where, using initial position, $c = 1$ and $d = 2$. We find $\mathbf{r}(t) = (3t^2/2 + 1)\mathbf{i} + (-t^2/2 + 2)\mathbf{j}$. It's over to you for $t > 2$ ...

† To verify your plot you could visit www.wolframalpha.com and type this into the orange box[1]

plot y=2cos(x) and y=cos(2x+pi/4) for -2pi<x<2pi

[1]Website checked on 17th July 2026

1P2R examples: Electricity

MT2026, Prof Paul Stavrinou

These questions are closely modelled on Prof T Wilson's 2020 1P2R example sheet.

Do as many of these questions as you can before you come to Oxford. Most of the questions are based on material that you will likely have covered in A-level physics, but you may wish to consult an undergraduate-level textbook if you get stuck. The recommended text is "Electrical and Electronic Technology" by Hughes et al. published by Pearson Higher Education/Longman (although there are many other similar texts which you could use instead). Don't worry if you find some of the questions difficult: All this material will be covered in the initial lectures and tutorials at Oxford. Some numerical answers are given at the end to help you check your results.

One piece of advice: Consider drawing diagrams and sketching plots for each question, even if you are not explicitly asked to. One can often find that simply trying to create a diagrammatic representation of the question (or answer) can help lead to a quicker or more intuitive result.

1 Current as a flow of charge

A metal wire $1\ \mathrm{m}$ long and $1.2\ \mathrm{mm}$ diameter carries a current of $10\ \mathrm{A}$. There are 10^{29} free electrons per cubic meter of metal and the charge on the electron is $1.6 \times 10^{-19}\ \mathrm{C}$. On average, how long does it take an electron to travel the length of the wire?

2 Resistance and resistivity

An electromagnet is built using a coil of wire with 1400 turns, in 14 layers. The inside layer has a diameter of $72\ \mathrm{mm}$ and the outside layer has a diameter of $114\ \mathrm{mm}$. The wire has a diameter of $1.6\ \mathrm{mm}$ and the resistivity of room-temperature copper may be taken as $16.8\ \mathrm{n\Omega m}$.

a) What is the approximate resistance of the coil?

b) What is the approximate power dissipated as heat if the coil carries a current of $6\ \mathrm{A}$?

[Hint: $\text{average turn length} = \pi \times \text{average diameter}$*]*

3 More resistivity

A laminated conductor is made by alternately depositing layers of silver $10\ \mathrm{nm}$ thick and layers of tin $20\ \mathrm{nm}$ thick. The composite material, considered on a larger scale, may be considered a homogeneous but anisotropic material with electrical resistivity $\rho_\perp$ for currents perpendicular to the planes of the layers, and a different resistivity $\rho_\parallel$ for currents parallel to that plane. Given that the resistivity of tin is 7.2 times that of silver, find the ratio of the resistivities, $\rho_\perp / \rho_\parallel$. *[Hint: Drawing a diagram of a piece of the laminated conductor, labelling all dimensions, would be an excellent starting point].*

4 Simplified models

To analyse complicated systems, engineers seek to describe their components using the simplest possible models that capture the important effects. Of course, when an engineer makes assumptions to simplify the analysis of a problem, they must satisfy themselves (and others!) that these assumptions are justified. In circuit analysis, the

description of components relates voltages and currents – for example using the concept of resistance and Ohm's law.

a) What are the properties of the 'ideal' conductors drawn in circuit diagrams? How are they a simplified model of real conductors?
b) A $12\,\mathrm{V}$, $10\,\mathrm{W}$ lightbulb is connected to a large $12\,\mathrm{V}$ battery using copper wire of radius $0.5\,\mathrm{mm}$ and total length $1\,\mathrm{m}$. Estimate the equivalent resistance of the lightbulb and calculate the current flowing in the circuit.
c) What assumptions have you made, and are they justified? Think about your models for each of the battery, the wire, and the lightbulb.

A battery produces a voltage through a complicated electrochemical process. However, to a good approximation, the electrical behaviour viewed from 'outside the box' is quite simple: the voltage falls as the battery supplies more current. You will likely have already met the idea of modelling a battery using an ideal voltage source V_b connected in series with a resistance R_b, as shown below:

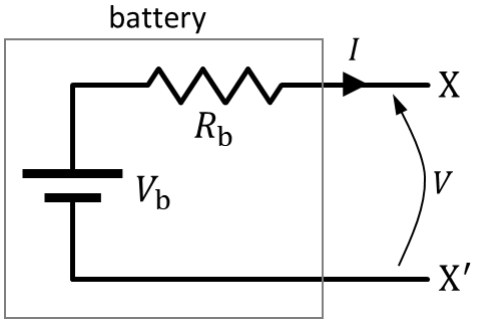

d) If the voltage measured across the battery terminals $\mathrm{XX'}$ with no current flowing is $12\,\mathrm{V}$ but the voltage drops to $11.7\,\mathrm{V}$ when a current $I = 10\,\mathrm{A}$ is drawn, find the values of V_b and R_b.

e) There is now a fault in the lightbulb, and it acts as a short circuit. What models of the wire and battery are now appropriate?

f) What current now flows in the circuit? In practice, what might happen to the wire and/or battery if the circuit is left connected?

The model we used for the battery can be extended to any voltage source. For example, in the laboratory, you will use a *signal generator* which you might set to supply a sine wave voltage of magnitude $5\,\mathrm{V}$ and frequency $1\,\mathrm{kHz}$ (this is an AC source, whereas a battery is a DC source). Internally, a signal generator is a complex circuit made up of many components. However as, far as the outside world is concerned, it can be modelled in exactly the same way as a battery: as a voltage source V_S with resistance connected in series, as shown below. The series resistance is often called the *source resistance*, R_S or the *output resistance*, R_out.

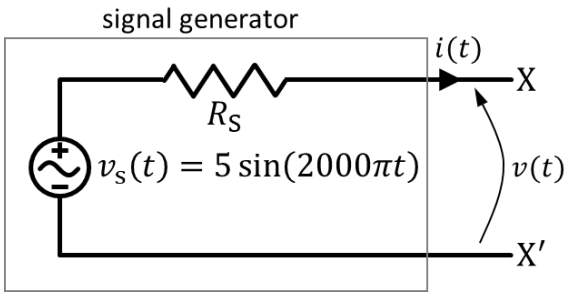

g) What is the open-circuit voltage across the terminals XX'? *[Hint: The term 'open-circuit' means nothing is connected across the terminals.]*

h) If R_S is $10\,\Omega$, what is the voltage across the terminals XX' when a resistance of $100\,\Omega$ is connected across them?

i) For another signal generator that produces the same open-circuit voltage, a resistance of $100\,\Omega$ connected across the terminals XX' results in a terminal voltage of magnitude $4.9\,\mathrm{V}$. What is R_S for this source?

5 Circuit analysis

One of the fundamental skills that an electrical engineer must learn is *circuit analysis*. To perform circuit analysis, one systematically applies a set of techniques to turn a schematic (diagrammatic) representation of a practical circuit into a set of equations that can be manipulated and solved to find quantities of interest (e.g., voltages, currents, unknown component values). For DC circuits (that is, circuits than only contain DC voltage or DC current sources), circuit analysis is really just the systematic application of Ohm's Law.

a) Find the resistance R_{AB} between A and B in the circuit below. *[Hint: re-draw the circuit combining the series and parallel components. You need not do this in one step.]*

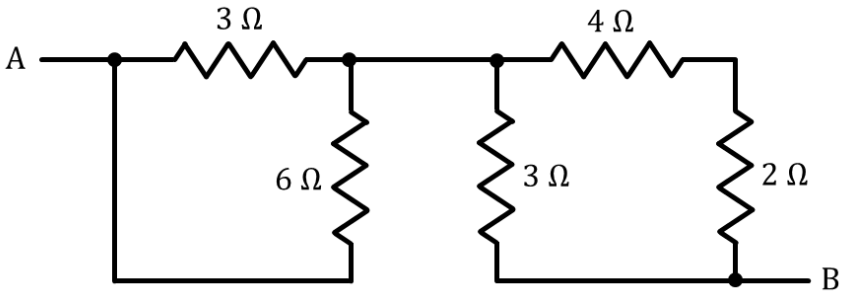

b) Find the current I in the circuit below.

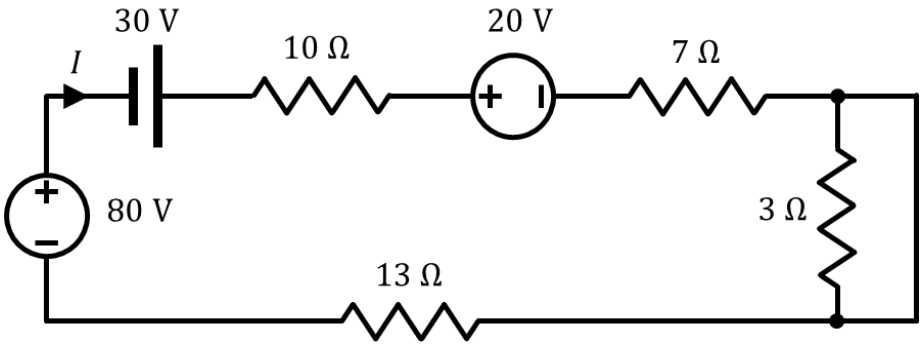

c) If an infinite number of resistors (not necessarily having the same value) are connected in series, to what limit does the overall

resistance of the combination tend? What is the limit if the resistors are connected in parallel?

d) For the circuit shown below, choose R_1 and R_2 so that the voltage V is $10\,\mathrm{V}$ when the device A draws zero current, but falls to $8\,\mathrm{V}$ when I rises to $1\,\mathrm{mA}$.

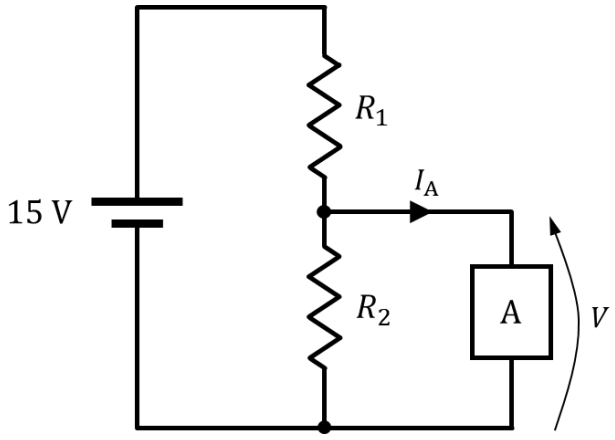

6 Capacitors and inductors

a) In the circuit below, what is the equivalent capacitance between A and B?

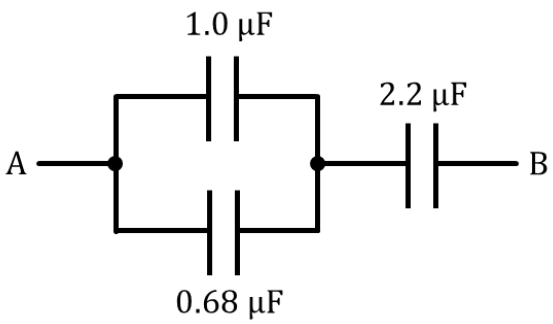

b) For a resistor, capacitor, and inductor, write down the equations that relate the current flowing through the component to the voltage across the component.

c) If an AC voltage of $v(t) = V_0 \sin(\omega t)$ is applied to each of these components (see figures below), give an expression for the current $i(t)$ in each case. *[Hint: Remember that current is the rate-of-change of charge. You may need to look up the behaviour of an inductor.]*

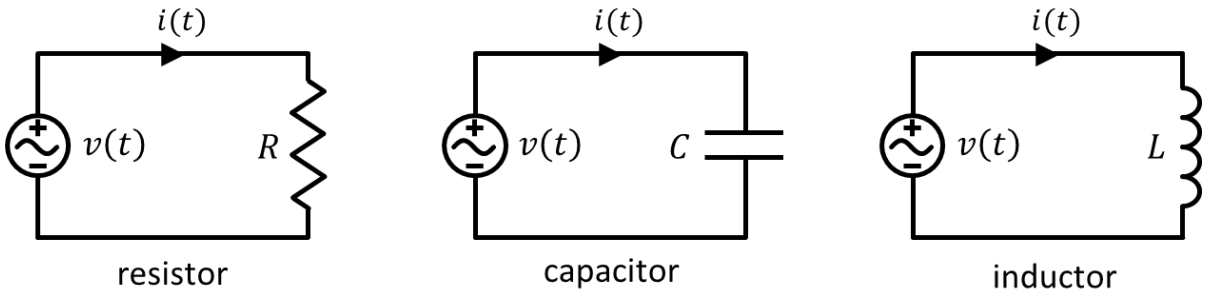

Recall that the instantaneous power in an electrical circuit is the product of voltage and current. In an AC circuit, both voltage and current vary with time (as you have just seen in your previous answers), so the instantaneous power must also vary with time. With this in mind:

d) Give an expression for the instantaneous power in each case.
e) Give an expression for the average power in each case.

7 Numerical solutions

Question 1

About half an hour.

Question 2

$3.66\ \Omega$ and $132\ \mathrm{W}$.

Question 3

$$\frac{\rho_\perp}{\rho_\parallel} = 2.17$$

Question 4

a) (none)
b) $R_{\mathrm{bulb}} = 14.1\ \Omega$ and $I = 833\ \mathrm{mA}$
c) (none)
d) $V_{\mathrm{b}} = 12\ \mathrm{V}$ and $R_{\mathrm{b}} = 30\ \mathrm{m\Omega}$.
e) $R_{\mathrm{wire}} = 20.3\ \mathrm{m\Omega}$

f) $I = 239\ \mathrm{A}$

g) $v(t) = 5\sin(2000\pi t)$

h) $v(t) = 4.54\sin(2000\pi t)$

i) $R_\mathrm{S} = 2.04\ \Omega$

Question 5

a) $4\ \Omega$

b) $3\ \mathrm{A}$

c) (none)

d) $R_1 = 3\ \mathrm{k\Omega}$ and $R_2 = 6\ \mathrm{k\Omega}$

Question 6

a) $0.953\ \mu\mathrm{F}$

b) (none)

c) (none)

d)

$$p_\mathrm{R}(t) = \frac{V_0^2}{R}\sin^2(\omega t)$$

$$p_\mathrm{C}(t) = \frac{\omega C V_0^2}{2}\sin(2\omega t)$$

$$p_\mathrm{L}(t) = -\frac{V_0^2}{2\omega L}\sin(2\omega t)$$

e)

$$\langle p_\mathrm{R}(t)\rangle = \frac{V_0^2}{2R}$$

$$\langle p_\mathrm{C}(t)\rangle = 0$$

$$\langle p_\mathrm{L}(t)\rangle = 0$$

Revision 2

Part A Statics and Dynamics

Introduction

The questions in this short introductory examples sheet deal with material which is mainly covered in A Level Physics or Mathematics. They are intended to help you make the transition between school work and the Engineering Science course at Oxford. You should attempt these questions before you come to Oxford and be prepared to discuss any difficulties with your tutor when you first meet with them. The P3 Statics lectures, which will take place at the beginning of your first term, will build on the topics covered in the first group of problems. Although the P3 Dynamics lectures will not take place until later in the academic year, it is still essential for you to attempt the second group of problems at this stage.

For the acceleration due to gravity use g = 10 m/s^2.

Statics Problems

1. An aeroplane with four jet engines, each producing 90 kN of forward thrust, is in a steady, level cruise when engine 3 suddenly fails. The relevant dimensions are shown in Figure 1. Determine the resultant of the three remaining thrust forces, and its line of action.

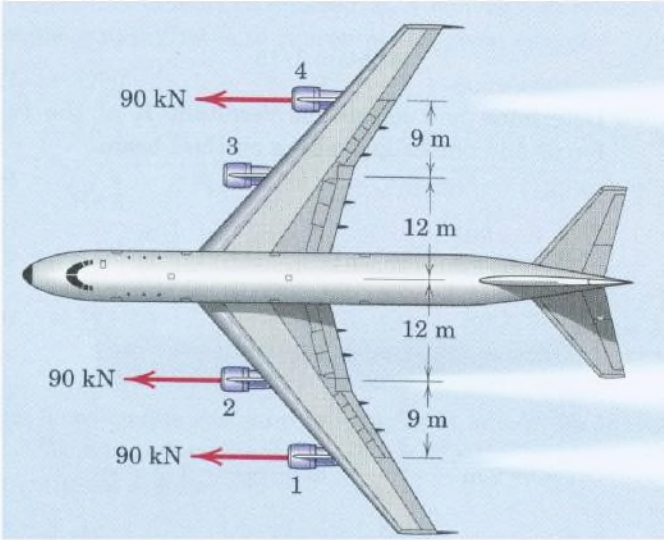

Figure 1

2. The foot of a uniform ladder rests on rough horizontal ground while the top rests against a smooth vertical wall. The mass of the ladder is 40 kg. A person of mass 80 kg stands on the ladder one quarter of its length from the bottom. If the inclination of the ladder is 60° to the horizontal, calculate:

a) the reactions at the wall and the ground;

b) the minimum value of the coefficient of friction between the ground and the ladder to prevent the ladder slipping.

3. Figure 2 shows a tower crane. The counterweight of 1500 kg is centred 6 m from the centreline of the tower. The distance *x* of the payload from the centreline of the tower can vary from 4 to 18 m.

a) Calculate the moment reaction at the base of the tower with:

- no payload
- payload of 1000 kg at x = 4 m
- payload of 1000 kg at x = 18 m

b) Show that the effect of the counterweight is to reduce the magnitude of the maximum moment reaction by a factor of 2.

c) Explain why changing the size of the counterweight would be detrimental.

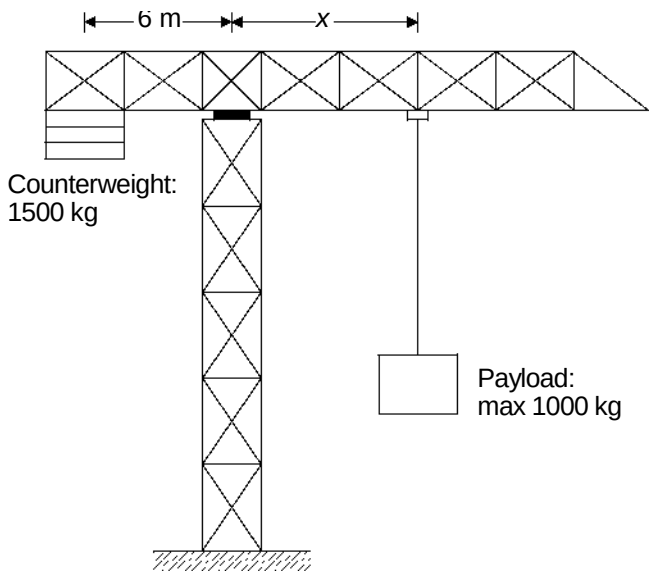

Figure 2

4. a) Figure 3 shows Galileo's illustration of a cantilever (i.e. a beam that is rigidly fixed at one end and unsupported at the other). If the beam is 2 m long and has mass per unit length of 7.5 kg/m, and the rock E has mass 50 kg, calculate the vertical reaction and the moment reaction at the wall.

b) A second cantilever tapers so that its mass per unit length varies linearly from 10 to 5 kg/m from the left hand to right hand ends, and it does not carry a rock at its free end. Calculate the vertical and moment reactions at the wall.

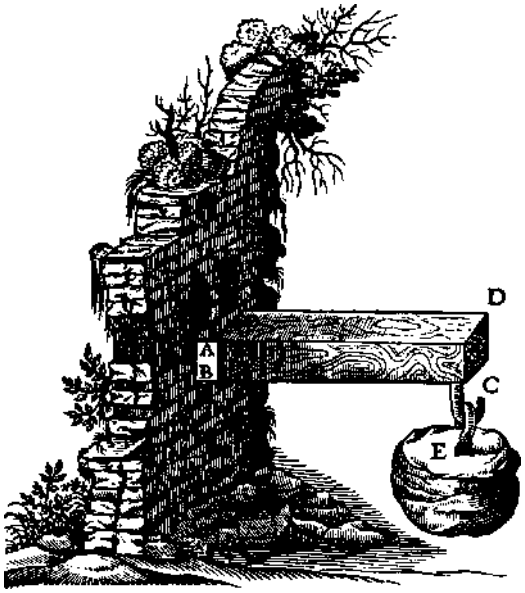

Figure 3

5. Figure 4 shows a plan view of a circular table of radius 400 mm and weight 400 N supported symmetrically by three vertical legs at points A, B and C located at the corners of an equilateral triangle of side 500 mm. An object weighing 230 N is placed at a point D on the bisector of angle ABC and a distance *x* from AC. Assume that the reactions at A, B and C are vertical.

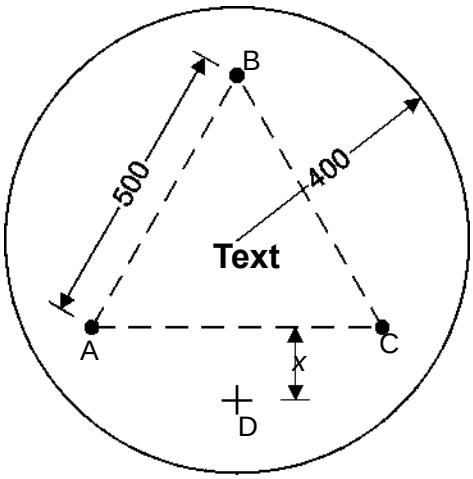

Figure 4

a) Find the value of x and the values of the reactions at which the table starts to tip.

b) Explain why the table cannot tip if the object weighs 220 N.

6. Blocks A and B have mass 200 kg and 100 kg respectively and rest on a plane inclined at 30° as shown in Figure 5. The blocks are attached by cords to a bar which is pinned at its base and held perpendicular to the plane by a force P acting parallel to the plane. Assume that all surfaces are smooth and that the cords are parallel to the plane.

a) Draw a diagram of the bar showing all the forces acting on it.

b) Calculate the value of P.

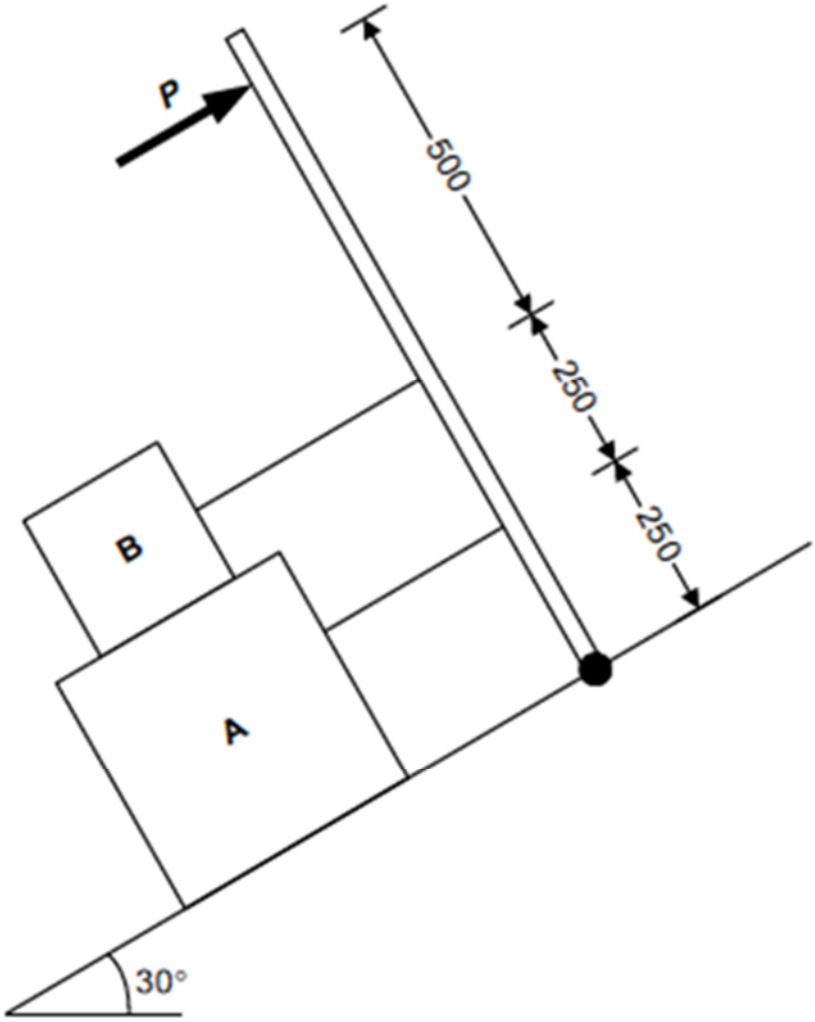

Figure 5

7. Figure 6 shows a uniform bar of weight *W* suspended from three wires. An additional load of 2*W* is applied to the bar at the point shown.

a) Draw a diagram of the bar showing all the forces acting on it.

b) Write down any relevant equilibrium equations and explain why it is not possible to calculate the tensions in the wires without further information.

c) In one such structure it is found that the centre wire has zero tension. Calculate the tensions in the other two wires.

d) In a second such structure assume that the wires are extensible and the bar is rigid. Write down an expression for the extension of the middle wire in terms of the extensions of the two outside wires. Assuming the tensions in the wires are proportional to the extensions, calculate the tensions for this case.

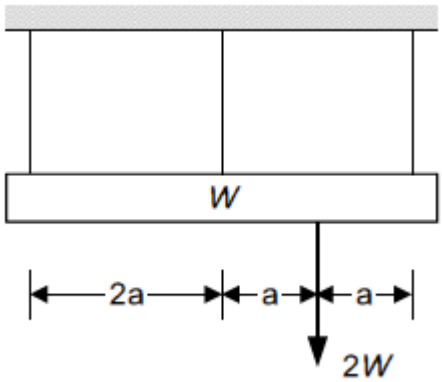

Figure 6

8. The three bars in Figure 7 each have a weight *W*. They are pinned together at the corners to form an equilateral triangle and suspended from A.

a) Draw a diagram of each bar separately, showing all the forces acting on each bar.

b) Calculate the compressive force in bar BC.

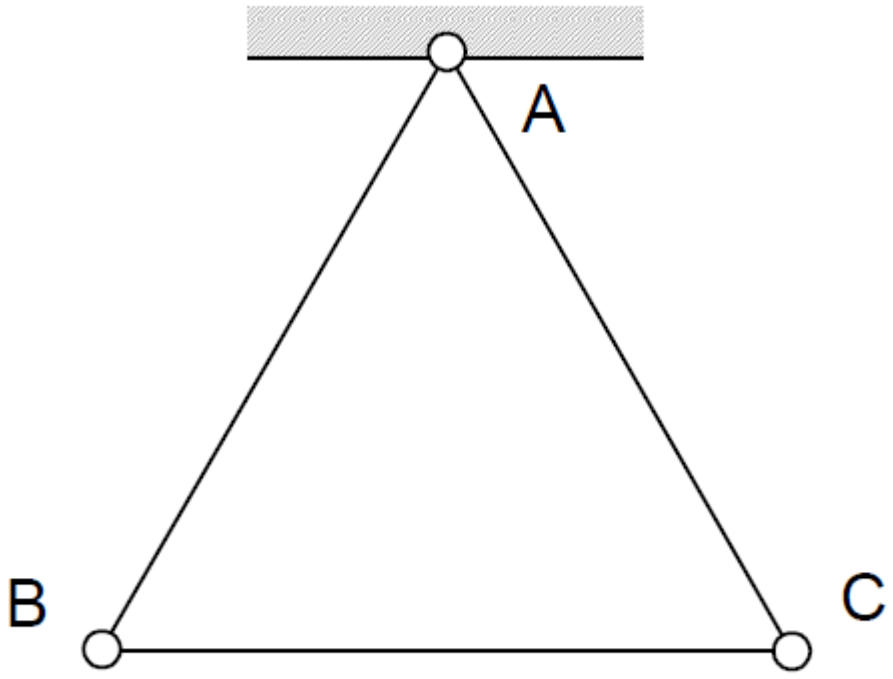

Figure 7

Dynamics Problems

9. A body with initial velocity *u* has constant acceleration *a*. Starting from the definition that velocity is the rate of change of displacement, and acceleration is the rate of change of velocity, show that:

a) $v = u + at$

b) $v^2 = u^2 + 2as$

c) $s = ut + \frac{1}{2}at^2$

d) A stone takes 4 s to fall to the bottom of a well. How deep is the well? What is the final velocity of the stone? What problems would you encounter in this calculation if the stone took 50 s to reach the bottom?

e) How do the equations in a), b) and c) change if the acceleration is not constant?

10. A car engine produces power of 20 kW. If all of this power can be transferred to the wheels and the car has a mass of 800 kg, calculate:

a) the speed which the car can reach from rest in 7 s;

b) the acceleration at time 7 s.

Is it reasonable to assume the power is constant? How does the gearbox in the car help to make this a more reasonable assumption?

11. A stone of mass *m* is tied on the end of a piece of string. A child swings the stone around so that it travels in a horizontal circle of radius *r* at constant angular velocity ω rad/s. Write down expressions for:

a) the speed of the stone;

b) the time to travel once around the circle;

c) the acceleration of the stone, specifying its direction;

d) the kinetic energy of the stone;

e) the tension in the string and the angle it makes with the horizontal if the gravitational acceleration is g.

12. a) A bicycle wheel has radius R and mass m, all of which is concentrated in the rim. The spindle is fixed and the wheel rotates with angular velocity ω. Calculate the total kinetic energy of the wheel. How does the kinetic energy differ from this if the wheel is rolling along with angular velocity ω, rather than spinning about a fixed axis?

b) In contrast to part a), a disc of mass m, radius R and angular velocity ω has its mass uniformly distributed over its area. Calculate the total kinetic energy of the disc as follows:

i) Write down the mass of the disc contained between radius r and radius $r + dr$.

ii) Write down the speed of this mass.

iii) Calculate the kinetic energy of this mass.

iv) Calculate the total kinetic energy of the whole disc by integrating the previous result with respect to r between the limits $r = 0$ and $r = R$

I. Mear

Oxford Engineering: First Year P5 Computing Lab

Introduction to Computing for Engineers

This document introduces the first year P5 Computing Lab, a year long course you will take. It also contains some general IT information, such as how to access free software if you have a personal computer.

Checklist: Complete all before Tuesday Week 1

- Work through this booklet. Use the tick boxes to track your progress.
- The tasks do not have to be completed in order.
- Some tasks can only be completed once your Oxford E-mail / Single Sign On is activated.

Task		Page
☐ Watch the Computing Lab Introduction Video [30mins]		1
☐ Read key information about the Computing Lab [5mins]		2-3
☐ Read the Digital Skills Guide and post to shared board [5 hours]		4
Once you have your Single Sign On (SSO)	☐ Access MATLAB using your Single Sign On [10mins]	4
	☐ Complete the online course MATLAB Onramp [2-3 hours]	5
	☐ Access and learn how to use Canvas [30 mins]	5-6
☐ Double check you have the pre-requisite skills using the checklist [10 mins]		7

If you have any questions, please e-mail me at isaac.mear@eng.ox.ac.uk

Icons throughout from www.flaticon.com, by icongeek26, DinosoftLabs, and FreePik.

Why Computing?

Using a computer is an essential aspect of a professional engineer's work. In your studies, you will use many software packages that are invaluable tools for engineers. You will learn different software in different labs. To learn a variety of software well and keep up with the fast-paced Oxford course, you need good general IT skills. There is a longer Digital Skills Guide, please make sure you have the basic skills outlined there before the course starts.

The first year Computing Lab is a course that teaches you computer programming, using MATLAB. It is used by engineers in industry and academia. It is a powerful tool offering efficient computations on large data sets. Watch this video to see the tasks you can do with MATLAB. Throughout your studies, you will use MATLAB many times, for example to simulate rocket launches, analyse data from vibrating buildings and help you design a bridge. After your first year, you will get to use other languages such as Python and C/C++.

Expectations

1. **We do not expect any prior knowledge of programming**.
   The Computing Lab is an introductory course. Typically, a third of the first-year students will not have written code before. Even if you already have experience, there will likely still be topics that are new to you such as MATLAB itself and professional methods for designing and documenting code.

2. **You must practice programming outside of the scheduled lab time**
   You will be introduced to programming over four lectures and five 5 hour lab sessions across the year. Programming is like learning a foreign language, **you must practice often for success.** To support this, we will provide coding exercises and quizzes after each lab**.** Without this, you will forget what you have learnt in labs.

3. **Computer skills, including programming, are key for professional engineers.**
   Coding is for everyone, and even if you don't feel confident now, by the end of the year you will be modelling a SpaceX landing sequence.

Using Departmental Computers: Individual Account

There is **no requirement that you have your own computer.** You can use the high specification Departmental computers which have MATLAB installed.

The Department of Engineering IT team will email you your password and log-on detail. Keep an eye out for this! You will need it in your first lab.

Physical Lab Spaces

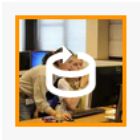

You can see all of the rooms where teaching takes place via this virtual tour. Each lab space has a 3D scan allowing you to explore. Use the swivel icon.

Software Lab A for Computing Labs

The Computing Labs are held in Software Lab A in Thom Building, Level 6.

- Outside of teaching time you can also 'drop in' and use these computers.
- If you prefer, you **may bring your laptop to the Computing Lab (don't forget your charger!)** However, do not bring a computer to any other practical labs.
- MATLAB can be installed for free on your computer, or you can use MATLAB Online. If you are using a tablet we recommend MATLAB Online not the MATLAB Mobile App. If you are buying a computer, you may want to consider the MATLAB system requirements. If you do not have a computer, your college may be able to help.

Design Office for 3D Design Work

In the P5 Drawing Labs course, you learn how to use design software SolidWorks for 3D Drawing. This is a professional software used in industry. Our Design Office has high specification computers capable of running SolidWorks. You are **not expected** to have a computer capable of running SolidWorks. If you want to look at SolidWorks before the course starts there are tutorials online.

If you have never done 3D design before, and you want to start with a more basic software feel free to explore www.onshape.com which is browser based and free. Having a mouse rather than using a trackpad is highly recommended!

Work Smarter: Basic Computer Skills

Everyone will join the course with a different level of competency with computers. It is useful to know how to work efficiently with Windows, used for Departmental computers, and your own computer. To help, read the guide which includes:

- Basic information to help with buying a computer
- Useful shortcuts for efficient working
- Introduction to file storage, file paths and expectations for organisation of lab files
- Links to free software, e.g. Office and anti-virus including storage on OneDrive

1. Read the Digital Skills Guide
2. Reflect on what you have learnt by submitting a post here.
3. Go through the Pre Term IT Checklist (see last page)

Accessing MATLAB

Once you have access to your **university e-mail address** and **Single Sign On (SSO)**, you can access MATLAB directly. If you do not have access to these yet, skip this section and move onto the next page.

If you have your SSO, complete the following steps:

(1) Link your SSO to the University MATLAB License

Follow the instructions to use our portal to access our MATLAB license.

(2) Access MATLAB Online

A web-based version of MATLAB is available at matlab.mathworks.com

(3) If you have a personal computer, you can install MATLAB

All versions are available. **MATLAB 2026a** or **2026b** will work for the lab.

Introduction to MATLAB

The best way to start with programming is to jump in and have a go! We expect everyone to have completed an online Introduction to MATLAB course before term starts. This gives a quick introduction to all the topics that will be covered this year. If you do not have access to a computer, please let me know isaac.mear@eng.ox.ac.uk

[Compulsory] Before Week 1: Complete MATLAB Onramp in English

A 2-hour introduction, accessible even without SSO.

Once you have finished, **save your PDF certificate!**

[Optional] Complete other key Learning Paths

If you want more practice, complete the Core Skills courses (~6hours) and the Programming Skills courses (~3hours). All free with your SSO.

Canvas

The main place to get information ahead of each lab is Canvas, Oxford's platform for teaching and learning.

Once you have your Single Sign On (SSO) log in at canvas.ox.ac.uk to see your courses.

Once you have access to Canvas:

- Read how to use Canvas (you'll be using it most days for 4 years!)
- Add your **photo** and name **pronunciation** to your profile.
- Turn **notifications on**, so you get lab announcements.

You may find it useful to install the Canvas app on your mobile

Search the App store for '**Canvas Student**'.

Two key Engineering Courses (which may only be published in Week 1 of term) are:

- **MEng Course Info** for your lab and lecture timetables
- **P5 Engineering Coursework** for all of information on your labs.

  This course has a **specific module for P5 Computing.**

For computing, each lab session will have **a page in Canvas** which contains:

- Details of any preparation work to be completed before the lab
- Notes for the lab session: examples, self-assessment questions and exercises.
- Links to any post lab assignments

You must check Canvas regularly and keep on top of assignment deadlines.

Once you have access to Canvas, upload your MATLAB Onramp certificate to the assignment under P5 Computing called "Computing Preparation Work"

Lab Notes

For every lab you attend, you should have already reviewed Canvas materials beforehand.

All lab notes and resources are on Canvas.

In the lab, there will be printed reference copies.

All computing Lab Notes will be formatted for readability: At least 12 font size with 1.5 line spacing and bookmarks to help with navigation.

We are keen to ensure everyone can fully take part in the labs.

If there is anything that will affect your learning in the computing labs, please let me know: isaac.mear@eng.ox.ac.uk

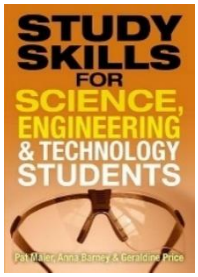

Note on Study Skills: The Lab Notes and MEng Course in general will not teach you how to study. It is up to you to come up with your own methods of studying. The book "Study Skills for Science, Engineering & Technology Skills" by Pat Maier is useful if you need support transitioning to University level study. It is available for free in the University Libraries.

Oxford Engineering Pre Term IT Checklist (2026-27)

Key University Software

☐ I can access Office via Nexus365 and use Word, Excel, OneNote, etc

☐ On my University e-mail I have a professional e-mail signature and calendar with term dates

☐ I've set up OneDrive and organised folders for e.g. Labs, Tutorials, and Lectures

☐ I know how to read PDFs efficiently including searching, bookmarks and annotations

☐ I know where to get free/discounted software from the IT Services website

☐ *If you have your own computer*: I have anti-virus activated (e.g. Defender, Sophos)

☐ *If you have your own computer:* I have installed Word, Excel, OneNote, etc

Accounts & Security

☐ I know my log on information for all key accounts: Departmental, SSO, and Remote Access Account

☐ I use strong, unique passwords and a password manager

☐ I have set up >2 multi-factor authentication (MFA) for SSO (mysignins.microsoft.com/security-info)

☐ I have connected to both WiFi networks in Thom Building (eduroam and engsci)

☐ I know how to lock my screen and log off a shared computer to maintain computer security

File Management & Backups

☐ I understand how a file system works (folders, file types, etc)

☐ On a Departmental Computer, I know how to find my Home Directory

☐ I can move files from Downloads folder to somewhere else on my local drive

☐ I've tested uploading and accessing files via OneDrive

Workflow Skills

☐ I've tested my typing speed, and if needed, scheduled some weekly practice time

☐ I've practiced split-screen view and quick change using shortcuts like Alt+Tab (Windows)

☐ *If you have your own computer*: I've customised my Taskbar/Dock with most-used apps

☐ I know how to take and annotate screenshots, extract text from images

☐ I can use a System Monitor to check running processes, and can quit apps (not just minimise)

☐ When using Departmental Windows Computers, I know how to turn on Clipboard History

☐ I know how to write equations in Word or LaTex for professional report writing

☐ I know how to use shortcuts to quickly: select all, select a continuous range and multiple files.